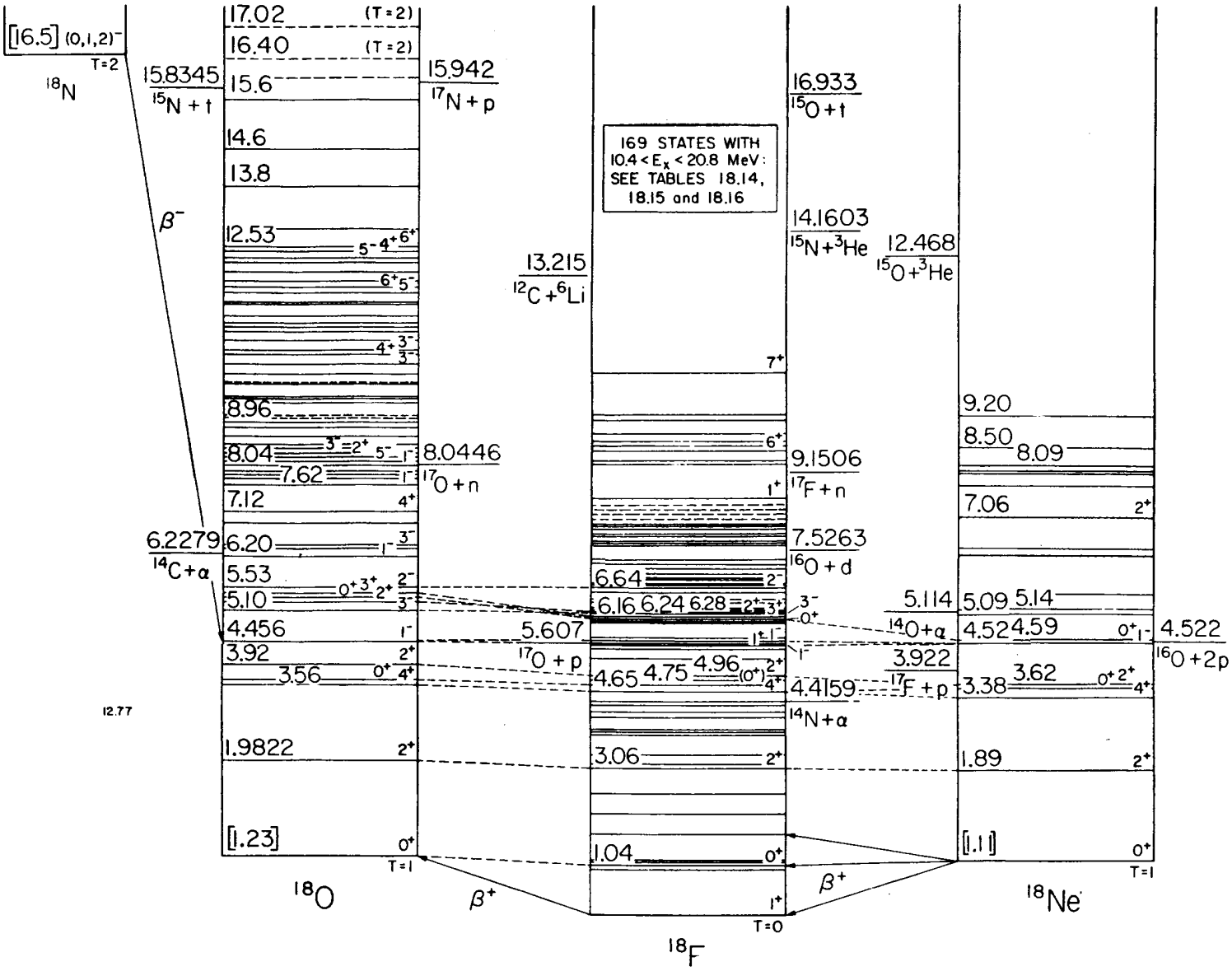
[16.5] (0,1,2)⁻
T=2
18N
15.8345
15N + t
β⁻
6.2279
14C+α
17.02 (T=2)
16.40 (T=2)
15.6
14.6
13.8
12.53
8.96
8.04
7.62
7.12
6.20
5.53
5.10
4.456
3.92
3.56
1.9822
[1.23]
T=1
18O
15.942
17N + p
8.0446
17O + n
5.607
17O + p
β⁺
13.215
12C + 6Li
169 STATES WITH 10.4 < Ex < 20.8 MeV: SEE TABLES 18.14, 18.15 and 18.16
6.64
6.16 6.24 6.28
4.65 4.75 4.96
3.06
1.04
T=0
18F
16.933
15O + t
14.1603
15N + 3He
9.1506
17F + n
7.5263
16O + d
4.4159
14N + α
β⁺
12.468
15O + 3He
5.114
14O + α
3.922
17F + p
9.20
8.50
8.09
7.06
5.09 5.14
4.52 4.59
4.522
16O + 2p
3.38 3.62
1.89
[1.1]
T=1
18Ne
12.77